CRANACH®

INSTALLATION MANUAL

Body jet

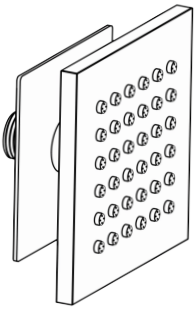

C30.FA03

ENGLISH

SAFETY NOTES

⚠ WARNING: To prevent product failure, property damage, and personal injury, please follow these guidelines:

⚠ The shower is designed exclusively for bathing, personal hygiene, and body cleaning purposes.

⚠ The shower arm is intended solely to support the showerhead. Do not hang any additional items from the shower arm.

⚠ Regularly clean your CRANACH product as needed to prevent the buildup of mineral scale and/or soap residue.

⚠ Please refer to the Cleaning Recommendations when choosing a cleaning agent for this product. Avoid using cleaning products that contain chlorine bleach, lye, hydrochloric acid, formic acid, acetic acid, or abrasive materials.

⚠ FAILURE TO ADHERE TO THESE INSTRUCTIONS MAY LEAD TO PRODUCT DAMAGE, MALFUNCTION, AND VOIDING OF THE WARRANTY.

INSTALLATION CONSIDERATIONS

CRANACH recommended that this unit be installed by a licensed professional plumber.

Before starting the installation, please read these instructions carefully and make sure you have all the required tools and materials on hand.

To avoid the risk of scalding, ensure that the maximum output temperature of the shower mixing valve (not included) does not exceed 120°F (49°C).

Keep this booklet and the receipt (or other proof of date and place of purchase) for this product in a safe place. The receipt is required should it be necessary to request warranty parts.

TECHNICAL INFORMATION

Max. Flow Rate:	2.5 GPM @ 80 PSI

We're Here to Help!
Visit our Support Center for detailed product guides, warranty policies, and troubleshooting tips. Need instant assistance? Reach out via live chat or email us directly at support@cranachhome.com.
For your convenience, we've provided quick access through the following QR codes:

Warranty Services
Scan the QR code below to quickly register your product warranty or access warranty-related information, ensuring peace of mind while using our products.

Download This Document
Want to save a copy of this document for future reference? Scan the QR code below to instantly download it to your device.
We're committed to providing you with prompt, efficient, and comprehensive support every step of the way!

cranachhome.com/warranty/

cranachhome.com/installation/

TOOLS REQUIRED

Safety Glasses

Teflon Tape

Allen Key

Adjustable Wrench

PARTS IN THE BOX

Read over these instructions thoroughly before beginning installation. Make sure that you have all tools and supplies needed to complete the installation.

C30.FA03

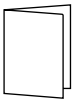

Installation Manual

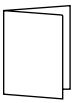

Warranty Card

Flange

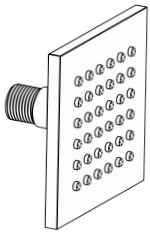

Bodyjet

INSTALLATION

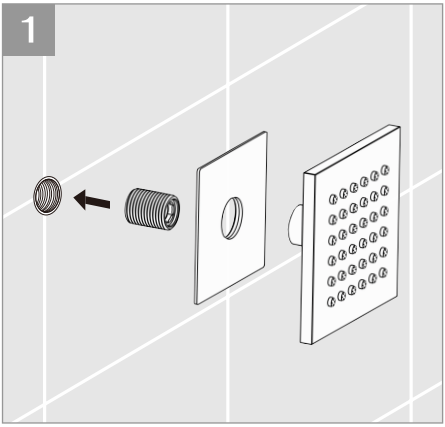

When removing the threaded pipe, handle it with care to avoid damaging the threads or other components.

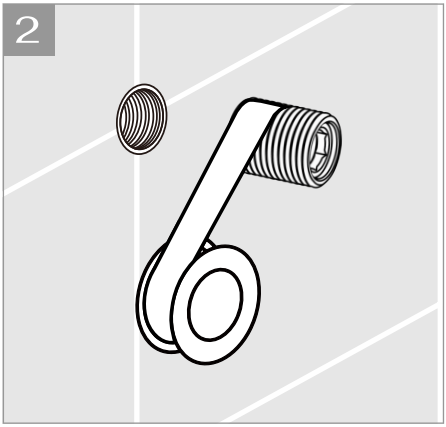

Apply an appropriate amount of teflon tape to the 1/2 NPT threaded pipe to create a secure seal at the connection point. Avoid overwrapping to prevent improper fitting.

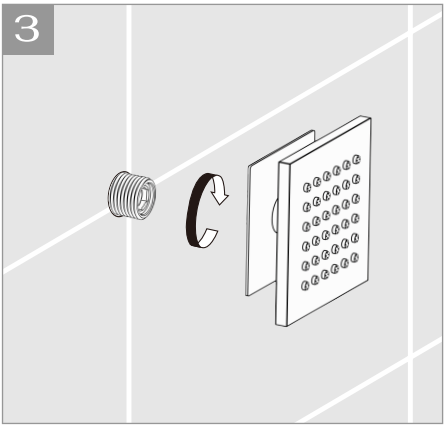

When attaching the bodyjet, tighten it securely without applying excessive force to avoid compromising the nozzle or the wall structure.

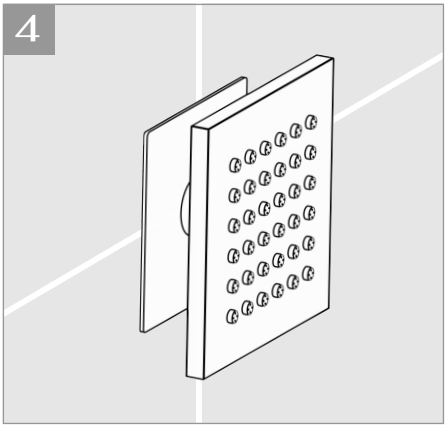

Once all installation steps are complete, inspect for any water leaks or loose connections to ensure a fully secure and stable setup.

WARRANTY

Parts and Finish:
All parts (excluding electronic parts and batteries) and finishes of CRANACH products purchased from authorized CRANACH sellers are warranted to the original consumer purchaser to be free from defects in material and workmanship for as long as the original consumer purchaser owns the home in which the faucet(s) are installed.
For commercial purchasers or multi-family residential properties (such as apartments and condominiums), the warranty period is 10 years from the date the product is received by the original purchaser or their authorized representative (e.g., installation contractor).

Electronic Parts:
Electronic parts (excluding batteries), if applicable, that are part of CRANACH products purchased from cranachhome.com or authorized CRANACH sellers are warranted to the original consumer purchaser to be free from defects in material and workmanship for 5 years from the date the product is received for residential use, 1 year for commercial purchasers. Batteries are not covered under this warranty.

What We Will Do:
If a defect is found during the applicable warranty period, CRANACH will provide replacement parts free of charge. This includes any part or finish that proves defective in material or workmanship under normal installation, use, and service. Before returning your faucet to CRANACH, please visit our website or contact our customer service team (via phone or email) for troubleshooting assistance.

Exclusions & Limitations:
This warranty does not cover damage caused by abuse, misuse, or improper care, lack of maintenance or improper installation, freezing water or excessive water pressure, abrasive cleaning products, or use in violation of applicable codes or regulations. Labor charges incurred during installation, repair, or replacement, damage incurred during installation or removal, or incidental or consequential damages, are excluded.

CARE AND CLEANING

Gently clean the product with clear water and wipe dry using a soft, lint-free cloth. Do not use soaps, acid, polish, abrasives or rough materials that may damage the surface.

CRANACH®

7933 Ley Rd Houston, TX, 77028

24hours Hotline:
+ (1) 888-263-8999

Email:
info@cranachhome.com

CR_INSTALLATION_V1.0_202501