CRANACH®
BATH & KITCHEN

INSTALLATION MANUAL

Tub Faucet

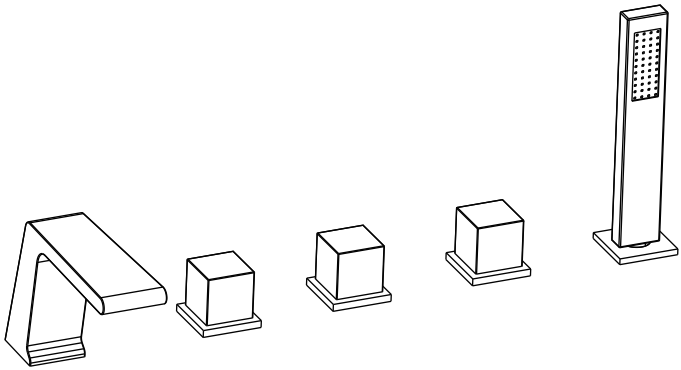

CO2.FA01

ENGLISH

SAFETY NOTES

⚠ WARNING: To prevent product failure, property damage, and personal injury, please follow these guidelines:

⚠ The shower is designed exclusively for bathing, personal hygiene, and body cleaning purposes.

⚠ The shower arm is intended solely to support the showerhead. Do not hang any additional items from the shower arm.

⚠ Regularly clean your CRANACH product as needed to prevent the buildup of mineral scale and/or soap residue.

⚠ Please refer to the Care And Cleaning when choosing a cleaning agent for this product. Avoid using cleaning products that contain chlorine bleach, lye, hydrochloric acid, formic acid, acetic acid, or abrasive materials.

⚠ FAILURE TO ADHERE TO THESE INSTRUCTIONS MAY LEAD TO PRODUCT DAMAGE, MALFUNCTION, AND VOIDING OF THE WARRANTY.

INSTALLATION CONSIDERATIONS

CRANACH recommends that this unit be installed by a licensed professional plumber.

Before starting the installation, please read these instructions carefully and make sure you have all the required tools and materials on hand.

To avoid the risk of scalding, ensure that the maximum output temperature of the shower mixing valve does not exceed 120°F (49°C).

TECHNICAL INFORMATION

Flow Rate:	>2.4 GPM @ 20 PSI MAX

Warranty Services
Scan the QR code to quickly register and activate your product warranty or access warranty-related information.

cranachhome.com/warranty/

Installation Manual
Scan the QR code to instantly access the installation manual for your product. Download it to your device for convenient future reference and to ensure a smooth setup process.

cranachhome.com/installation/

Need instant assistant? Reach out via our 24-hour customer support line at 888.263.8999 or via email at support@cranachhome.com.

RECOMMENDED TOOLS TO PREPARE

Safety Glasses

Teflon Tape

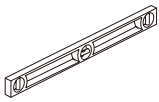
Level

Hammer

Power Drill

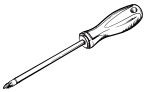
Screwdriver

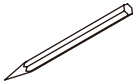
Pencil

Adjustable Wrench

PARTS IN THE BOX

Read over these instructions thoroughly before beginning installation. Make sure that you have all tools and supplies needed to complete the installation.

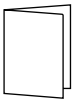

Installation Manual

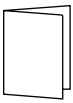

Warranty Card

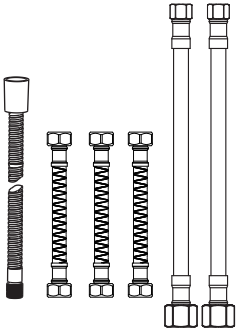

Connection Hose and Inlet Hoses

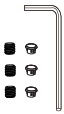

Spare Parts

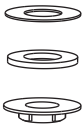

Tailpiece Nut Assembly

Hose Adapter Change G9/16 to G1/2

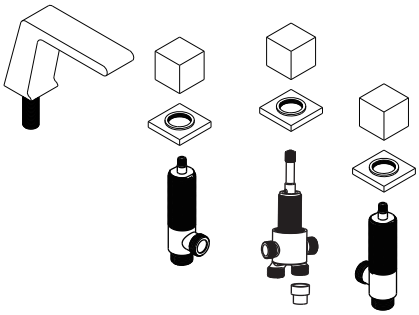

Faucet Body

Hand Shower

Hand Shower Base

INSTALLATION

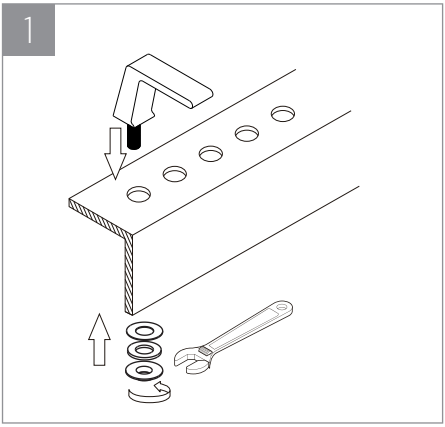

1. Insert the entire faucet spout through the mounting hole on the countertop, then secure it using the tailpiece nut assembly.

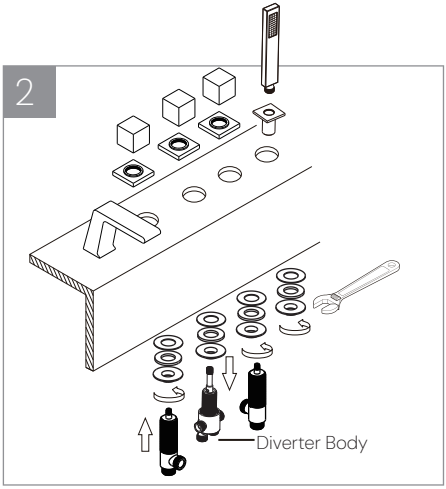

2.1 Other accessories should also be inserted through the countertop and secured using the tailpiece nut assembly.
2.2 Insert the diverter body upward through the countertop and connect it to the handle assembly.

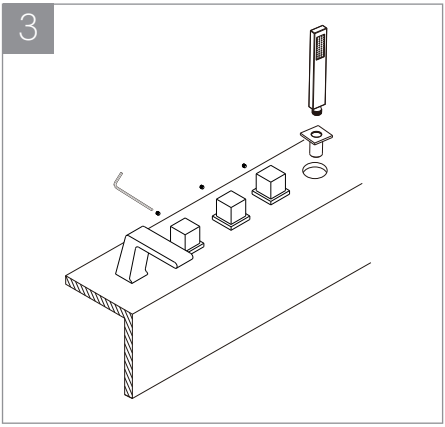

3. Attach the handle assembly and tighten the hex screw.

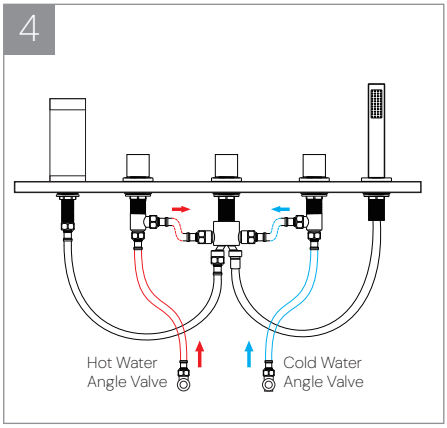

4.1 Connect the blue inlet hose to the cold water angle valve and the cold handle, and the red inlet hose to the hot water angle valve and the hot handle accordingly.
4.2 Pass the handheld shower hose through the base, and connect it to both the handheld showerhead and the diverter.
4.3 Connect the other hoses according to the positions shown in the diagram.
4.4 Finally, open the angle valves and the handle to check for any water leakage at the connection points.

WARRANTY

Parts and Finishes:
CRANACH warrants all parts (excluding electronic components and batteries) and finishes of this product, purchased from authorized CRANACH sellers, to be free from defects in material and workmanship.

- Residential Use:
  Lifetime warranty, for as long as the original consumer purchaser owns the home in which the product is installed.
- Commercial or Multi-Family Use:
  For a period of ten (10) years from the date the product is received by the original purchaser or their authorized representative.

Electronic Components:
If applicable, electronic components (excluding batteries) of CRANACH products purchased from cranachhome.com or authorized CRANACH sellers are warranted to the original consumer purchaser to be free from defects in material and workmanship.

- Residential Use:
  For a period of five (5) years from the date the product is received.
- Commercial or Multi-Family Use:
  For a period of one (1) year from the date the product is received.

What We Will Do:
During the applicable warranty period, if a defect is found in material or workmanship under normal installation, use, and service, CRANACH will provide replacement parts free of charge. Before returning your product to CRANACH, please visit our website or contact our customer service team (via phone or email) for troubleshooting assistance.

Exclusions & Limitations:
This warranty does not cover:

- Damage caused by abuse, misuse, improper care, lack of maintenance, or improper installation.
- Damage from freezing water or excessive water pressure.
- Damage from abrasive cleaning products or use in violation of applicable codes or regulations.
- Labor charges incurred during installation, removal, or repair of the product.
- Incidental or consequential damages.

CRANACH®
BATH & KITCHEN

7933 Ley Rd
Houston, TX, 77028
cranachhome.com

Installation_CO2.FA01_Rev1.0