CRANACH®
BATH & KITCHEN

INSTALLATION MANUAL

Bathroom Sink Faucet

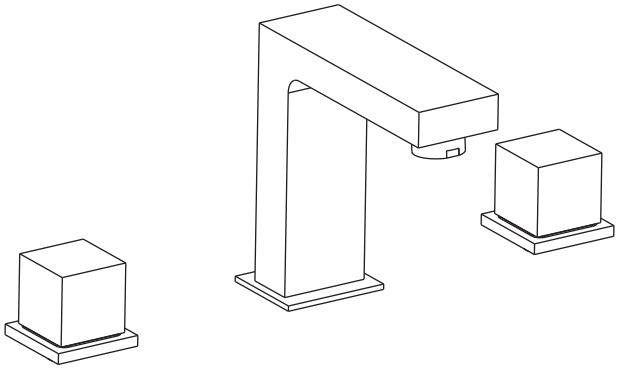

C50.CR05

ENGLISH

SAFETY NOTES

⚠ WARNING: To prevent product failure, property damage, and personal injury, please follow these guidelines:

⚠ Regularly clean your CRANACH product as needed to prevent the buildup of mineral scale and/or soap residue.

⚠ Please refer to the Care And Cleaning when choosing a cleaning agent for this product. Avoid using cleaning products that contain chlorine bleach, lye, hydrochloric acid, formic acid, acetic acid, or abrasive materials.

⚠ FAILURE TO ADHERE TO THESE INSTRUCTIONS MAY LEAD TO PRODUCT DAMAGE, MALFUNCTION, AND VOIDING OF THE WARRANTY.

INSTALLATION CONSIDERATIONS

CRANACH recommends that this unit be installed by a licensed professional plumber.

Before starting the installation, please read these instructions carefully and make sure you have all the required tools and materials on hand.

TECHNICAL INFORMATION

Max. Flow Rate:	1.2 GPM @ 60 PSI MAX

Warranty Services
Scan the QR code to quickly register and activate your product warranty or access warranty-related information.

cranachhome.com/warranty/

Installation Manual
Scan the QR code to instantly access the installation manual for your product. Download it to your device for convenient future reference and to ensure a smooth setup process.

cranachhome.com/installation/

Need instant assistant? Reach out via our 24-hour customer support line at 888.263.8999 or via email at support@cranachhome.com.

RECOMMENDED TOOLS TO PREPARE

Safety Glasses

Teflon Tape

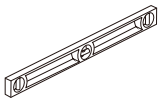
Level

Hammer

Power Drill

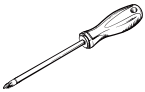
Screwdriver

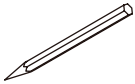
Pencil

Adjustable Wrench

PARTS IN THE BOX

Read over these instructions thoroughly before beginning installation. Make sure that you have all tools and supplies needed to complete the installation.

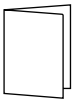

Installation Manual

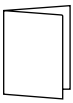

Warranty Card

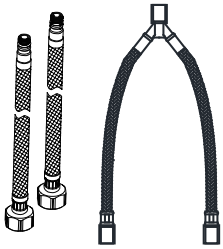

Connection Hose and Inlet Hoses

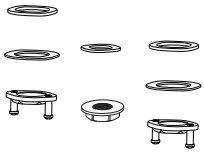

Tailpiece Nut Assembly

Hose Adapter Change G9/16 to G1/2

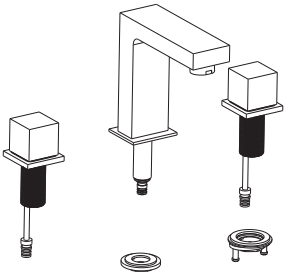

Faucet Body

Pop-Up Drain

INSTALLATION

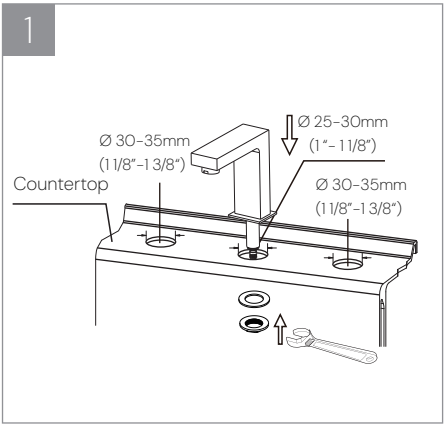

1.1 The countertop cutout dimensions are as shown in the diagram.
1.2 Place the faucet body through the pre-drilled countertop hole. Install faucet body gasket and mounting nut in sequence and tighten the nut with a wrench.

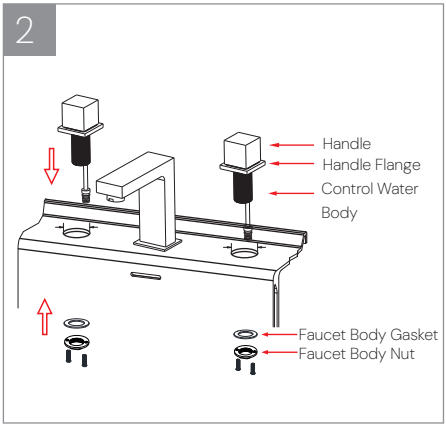

2.1 Separate the control water body and handle, place the handle above the countertop and the control water body below.
2.2 Connect the gandle, flange, and o-shaped abrasion-resistant ring in sequence, then attach the Handle to the control water body and tighten the screws.
2.3 Finally, use a screwdriver to tighten the Faucet Body Gasket and Nut.

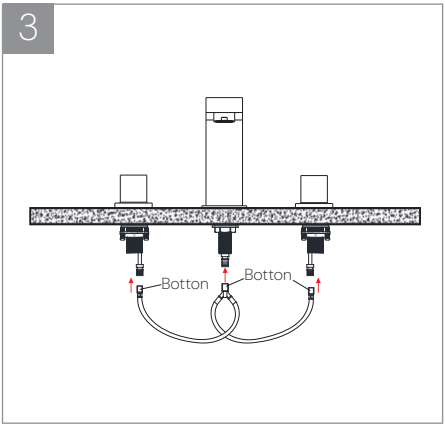

3. Press the button on one end of the connect hose and connect the Connect hose to the corresponding position as shown in the diagram.

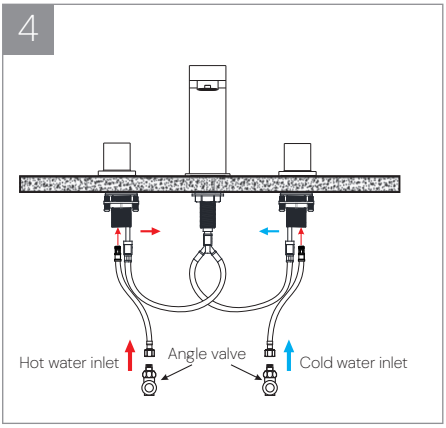

4.1 Connect one end of the hot and cold hoses to the control water body respectively.
4.2 Connect the other end of the hot and cold hoses to the corresponding angle valves controlling hot and cold water respectively.
4.3 Turn on the angle valves, open the handle to control the water flow, check if the water flows normally, and inspect for leaks at the connection points.

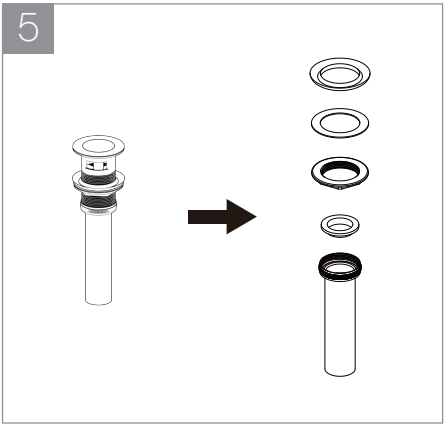

5. Disassemble the drain from the bottom and remove all components as shown.

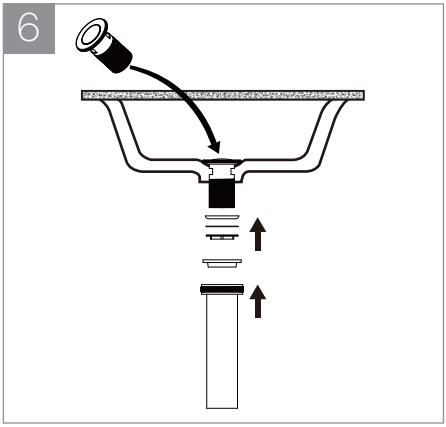

6. Insert the drain into the basin hole, then from underneath, attach the rubber gasket, washer, and brass sleeve. Tighten the sleeve by turning it right, but do not over-tighten.

WARRANTY

Parts and Finishes:
CRANACH warrants all parts (excluding electronic components and batteries) and finishes of this product, purchased from authorized CRANACH sellers, to be free from defects in material and workmanship.

- Residential Use:
  Lifetime warranty, for as long as the original consumer purchaser owns the home in which the product is installed.
- Commercial or Multi-Family Use:
  For a period of ten (10) years from the date the product is received by the original purchaser or their authorized representative.

Electronic Components:
If applicable, electronic components (excluding batteries) of CRANACH products purchased from cranachhome.com or authorized CRANACH sellers are warranted to the original consumer purchaser to be free from defects in material and workmanship.

- Residential Use:
  For a period of five (5) years from the date the product is received.
- Commercial or Multi-Family Use:
  For a period of one (1) year from the date the product is received.

What We Will Do:
During the applicable warranty period, if a defect is found in material or workmanship under normal installation, use, and service, CRANACH will provide replacement parts free of charge. Before returning your product to CRANACH, please visit our website or contact our customer service team (via phone or email) for troubleshooting assistance.

Exclusions & Limitations:
This warranty does not cover:

- Damage caused by abuse, misuse, improper care, lack of maintenance, or improper installation.
- Damage from freezing water or excessive water pressure.
- Damage from abrasive cleaning products or use in violation of applicable codes or regulations.
- Labor charges incurred during installation, removal, or repair of the product.
- Incidental or consequential damages.

CRANACH®
BATH & KITCHEN

7933 Ley Rd
Houston, TX, 77028
cranachhome.com

Installation_C50.CR05_Rev1.0