CRANACH®
BATH & KITCHEN

INSTALLATION MANUAL

Kitchen Faucet

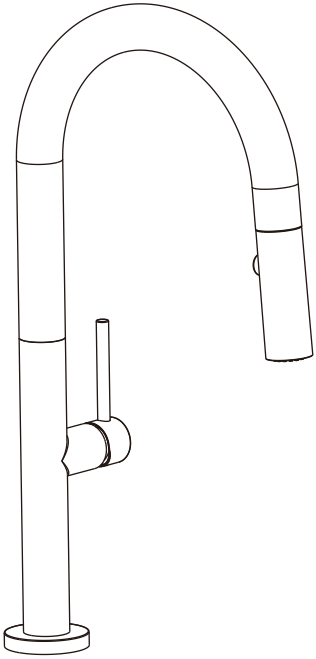

C59.FS03

ENGLISH

SAFETY NOTES

⚠ WARNING: To prevent product failure, property damage, and personal injury, please follow these guidelines:

⚠ Regularly clean your CRANACH product as needed to prevent the buildup of mineral scale and/or soap residue.

⚠ Please refer to the Care And Cleaning when choosing a cleaning agent for this product. Avoid using cleaning products that contain chlorine bleach, lye, hydrochloric acid, formic acid, acetic acid, or abrasive materials.

⚠ FAILURE TO ADHERE TO THESE INSTRUCTIONS MAY LEAD TO PRODUCT DAMAGE, MALFUNCTION, AND VOIDING OF THE WARRANTY.

INSTALLATION CONSIDERATIONS

CRANACH recommends that this unit be installed by a licensed professional plumber.

Before starting the installation, please read these instructions carefully and make sure you have all the required tools and materials on hand.

TECHNICAL INFORMATION

Max. Flow Rate:	1.8 GPM @ 60 PSI

Warranty Services
Scan the QR code to quickly register and activate your product warranty or access warranty-related information.

cranachhome.com/warranty/

Installation Manual
Scan the QR code to instantly access the installation manual for your product. Download it to your device for convenient future reference and to ensure a smooth setup process.

cranachhome.com/installation/

Need instant assistant? Reach out via our 24-hour customer support line at 888.263.8999 or via email at support@cranachhome.com.

RECOMMENDED TOOLS TO PREPARE

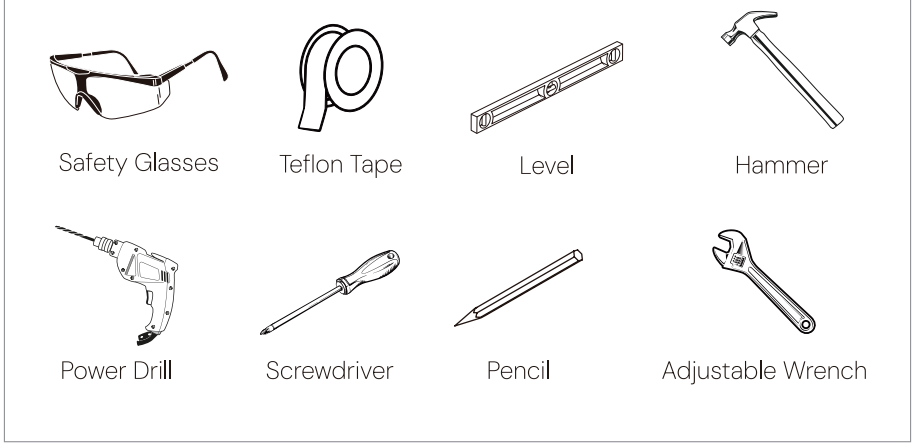

PARTS IN THE BOX

Read over these instructions thoroughly before beginning installation. Make sure that you have all tools and supplies needed to complete the installation.

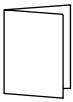

Installation Manual

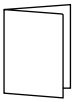

Specification

Lock Nut

Counterweight

Hose Adapter Change G9/16 to G1/2

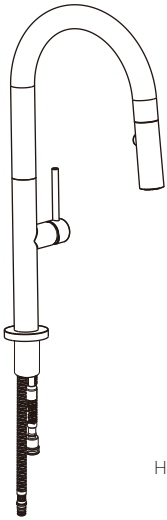

Faucet Body

Hot and Cold Water Supply Lines

INSTALLATION

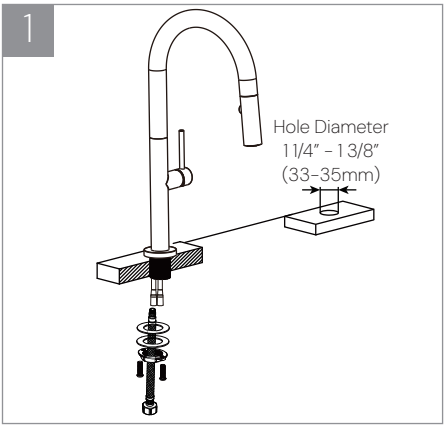

1. Attach the red hot water inlet pipe to the left connection point.

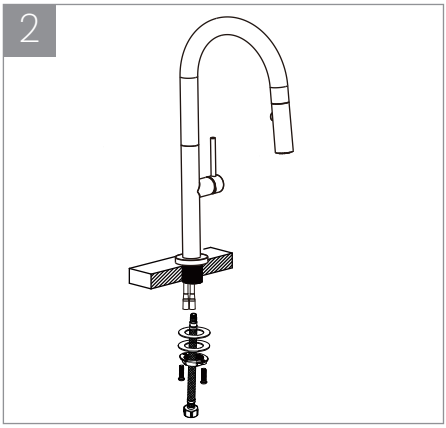

2. Attach the blue cold water inlet pipe to the right connection point.

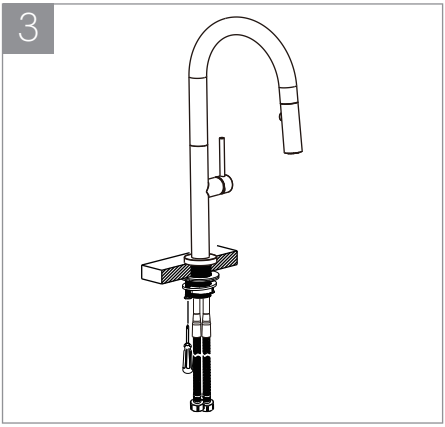

3. Secure both screws using a Phillips screwdriver.

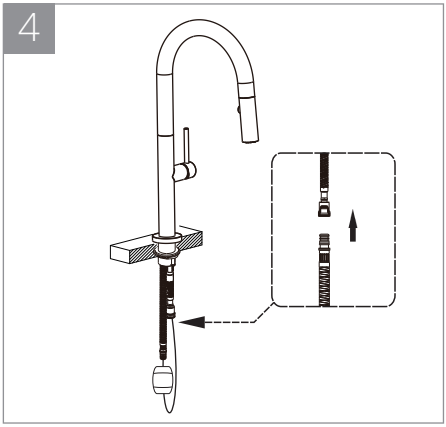

4. Unscrew the counterweight, clamp it onto the pull-out hose, then tighten the screw again. Connect the pull-out hose as shown in the diagram.

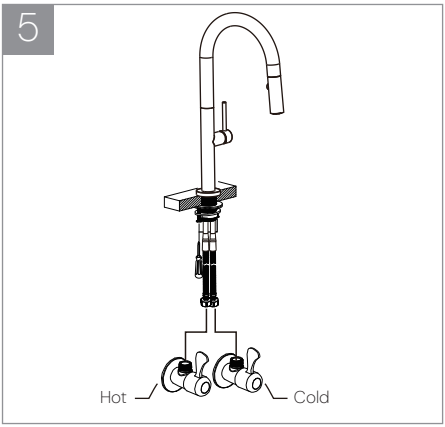

5. Connect the red and blue inlet pipes to the angle valves: red to the (H) hot water valve, blue to the (C) cold water valve.

WARRANTY

Parts and Finishes:
CRANACH warrants all parts (excluding electronic components and batteries) and finishes of this product, purchased from authorized CRANACH sellers, to be free from defects in material and workmanship.

- Residential Use:
  Lifetime warranty, for as long as the original consumer purchaser owns the home in which the product is installed.
- Commercial or Multi-Family Use:
  For a period of ten (10) years from the date the product is received by the original purchaser or their authorized representative.

Electronic Components:
If applicable, electronic components (excluding batteries) of CRANACH products purchased from cranachhome.com or authorized CRANACH sellers are warranted to the original consumer purchaser to be free from defects in material and workmanship.

- Residential Use:
  For a period of five (5) years from the date the product is received.
- Commercial or Multi-Family Use:
  For a period of one (1) year from the date the product is received.

What We Will Do:
During the applicable warranty period, if a defect is found in material or workmanship under normal installation, use, and service, CRANACH will provide replacement parts free of charge. Before returning your product to CRANACH, please visit our website or contact our customer service team (via phone or email) for troubleshooting assistance.

Exclusions & Limitations:
This warranty does not cover:

- Damage caused by abuse, misuse, improper care, lack of maintenance, or improper installation.
- Damage from freezing water or excessive water pressure.
- Damage from abrasive cleaning products or use in violation of applicable codes or regulations.
- Labor charges incurred during installation, removal, or repair of the product.
- Incidental or consequential damages.

CRANACH®
BATH & KITCHEN

7933 Ley Rd
Houston, TX, 77028
cranachhome.com

Installation_C59.FS03_Rev1.0