CRANACH
BATH & KITCHEN

INSTALLATION MANUAL

Shower Holder

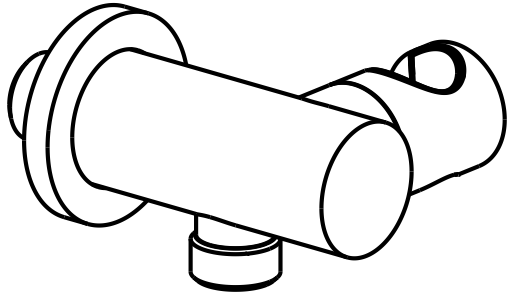

C92.HE31

PARTS IN THE BOX

Read over these instructions thoroughly before beginning installation. Make sure that you have all tools and supplies needed to complete the installation.

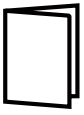

Installation Manual

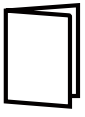

Specification

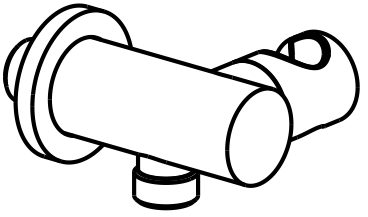

Handshower Holder

INSTALLATION

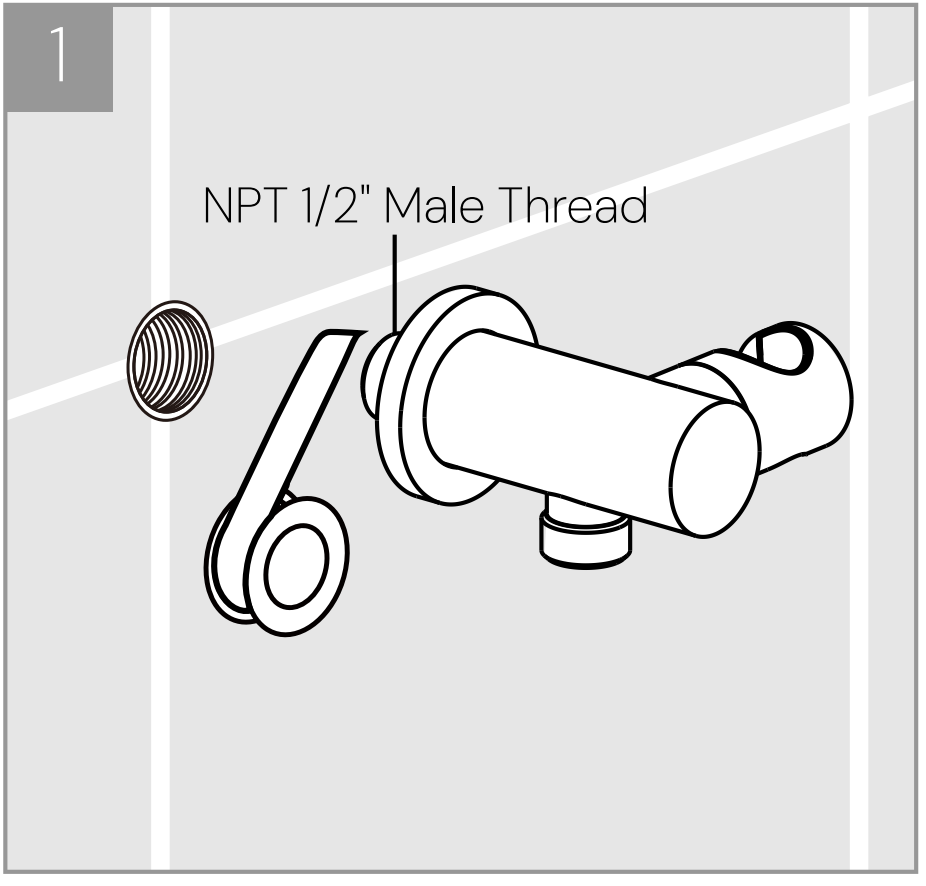

1. Wrap an appropriate amount of PTFE tape around the thread.

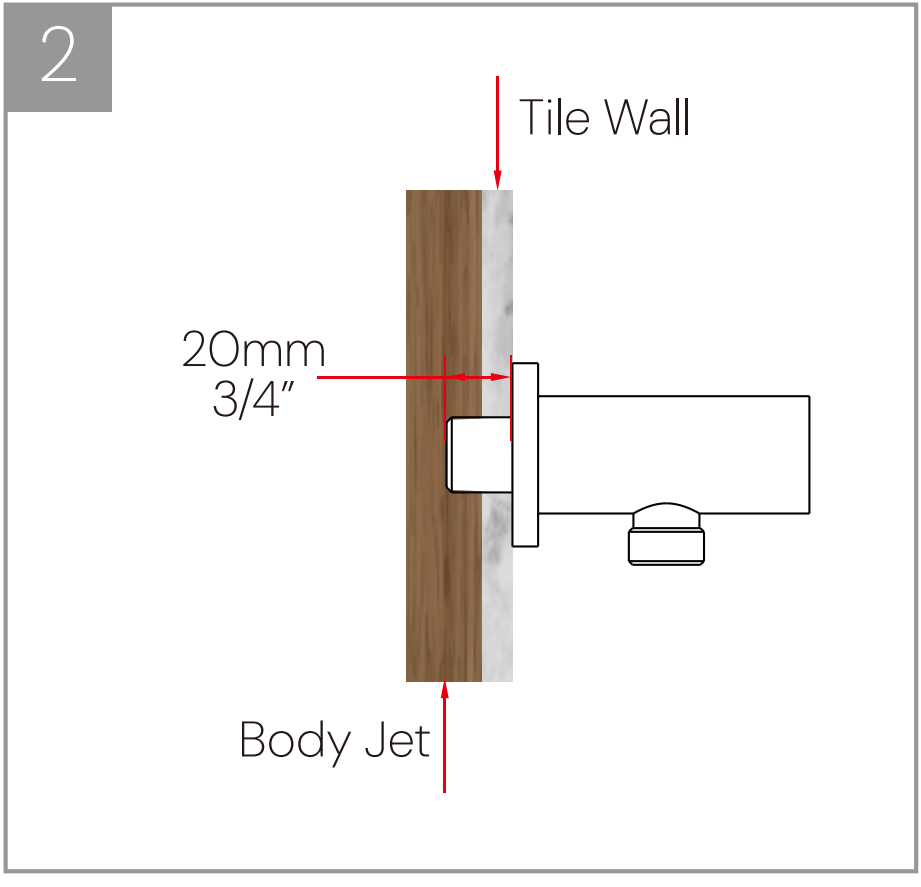

2. The diagram shows the embedding depth.

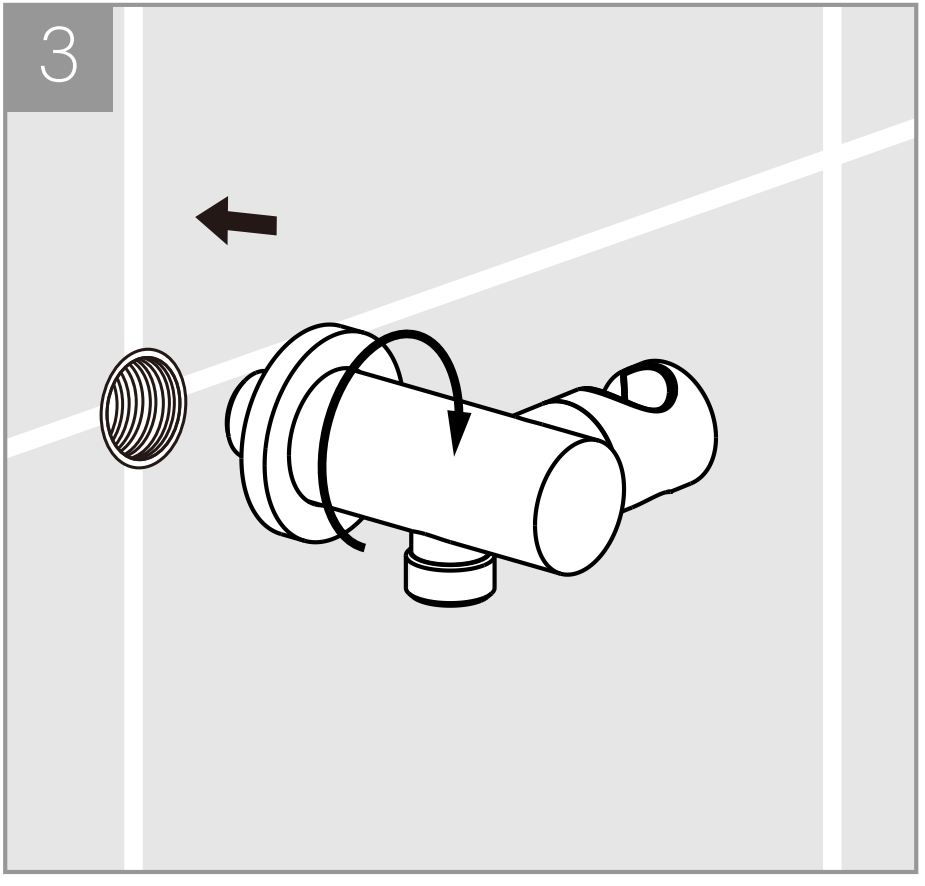

3. Screw the shower holder into the water outlet clockwise.

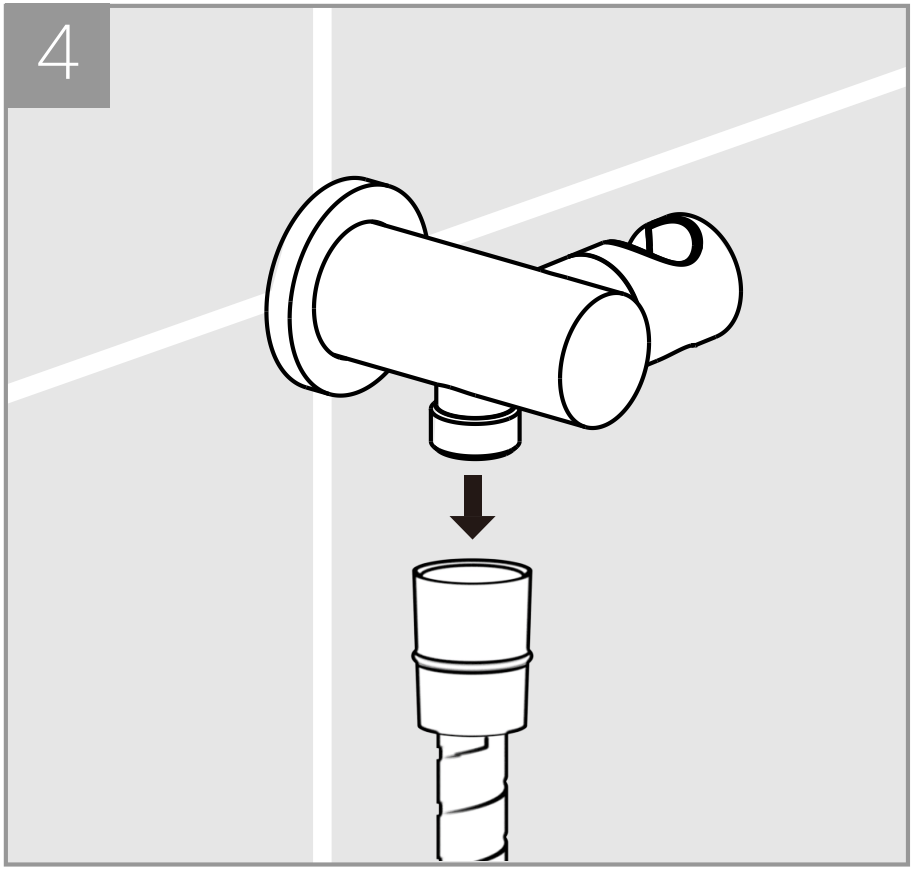

4. Rotate and tighten the body until there are no leaks.

Warranty Services

Scan the QR code to quickly register and activate your product warranty or access warranty-related information.

Installation Manual

Scan the QR code to instantly access the installation manual for your product. Download it to your device for convenient future reference and to ensure a smooth setup process.

Need instant assistant? Reach out via our 24-hour customer support line at 888.263.8999 or via email at support@cranachhome.com.



cranachhome.com/warranty/



cranachhome.com/installation/

CRANACH®
BATH & KITCHEN

7933 Ley Rd
Houston, TX, 77028
cranachhome.com

Installation_C92.HE31_Rev1.0