SHOWER SET

C01.CR03

CRANACH
BATH & KITCHEN





COMPONENT LIST

No.	SPU	Component	Qty	Page
01	C10.CR05	Shower Head Rain spray	1	02
02	C12.SA13	Shower Arm Wall-mounted	1	03
03	C61.PB11	Rough-In Valve Pressure balance	1	04
04	C64.CR11	Valve & Trim Escutcheon + lever	1	05

SHOWER HEAD

C10.CR05

CRANACH
BATH & KITCHEN

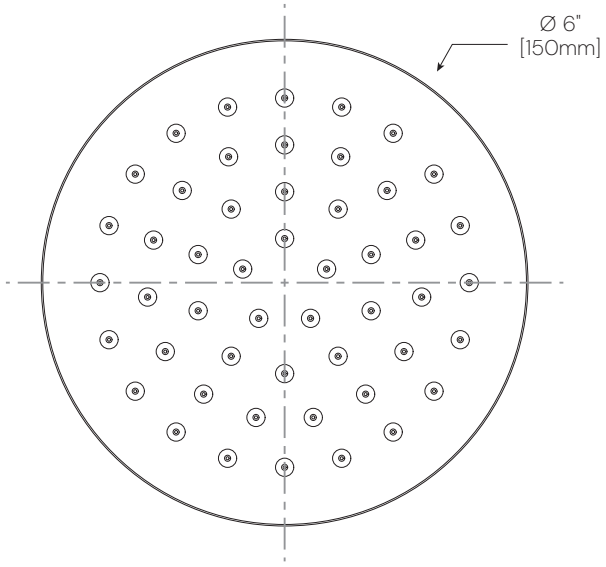

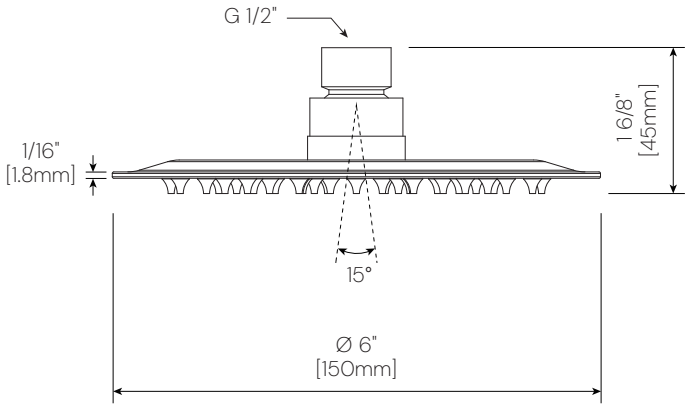

FEATURES

- Rain Spray
  Wide and even water flow, relaxing and spa-like sensation.
- Brass Ball Joint
  Durable adjustable joint, easy positioning of the showerhead.
- Easy Clean Spray Nozzles
  Lime and calcium buildup prevention, hassle-free maintenance.
- Solid Stainless Construction
  Premium stainless steel, durable and rust-resistant.

SPECIFICATION

- Rotation angle ±15°
- Inlet: G 1/2" female connection
- Size: Ø 6" (150mm)
- Shower arm and flange not included
- Finish Availability: Polished Chrome/Matte Black/Brushed Nickel/Brushed Gold

FLOW

- Maximum flow rate: 1.8 gpm (6.8 L/min) at 80 PSI
  Minimum flow rate: 1.3 gpm (5.1 L/min) at 45 PSI

WARRANTY

- Parts and Finish: Limited lifetime warranty for residential, or 10 years for commercial purchasers and multi-family (apartments and condominiums) residential, in each case from the date of purchase.

STANDARDS

- ASME A112.18.1/CSA B125.1

Cranach deserves the right to make changes in specifications and materials and to change or discontinue models both without notice or obligation. Dimensions are for reference only.

SHOWER ARM

C12.SA13

CRANACH
BATH & KITCHEN

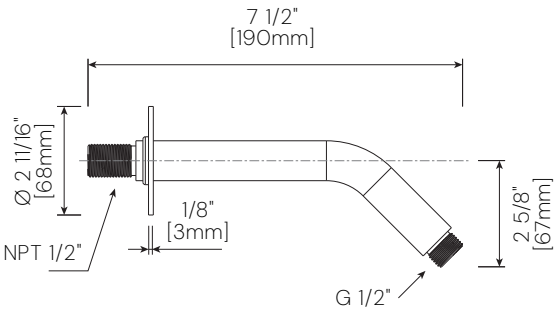

FEATURES

- All Metal Construction
  Durable metal build, superior strength and long-lasting reliability.
- Easy Wipe Clean
  Chemical-free cleaning, effortless maintenance on frequently touched areas.

SPECIFICATION

- Wall-mounted
- Inlet: NPT 1/2" male connection
- Outlet: G 1/2" male connection
- Shower arm and flange included

WARRANTY

- Parts and Finish: Limited lifetime warranty for residential, or 10 years for commercial purchasers and multi-family (apartments and condominiums) residential, in each case from the date of purchase.

STANDARDS

- ASME A112.18.1/CSA B125.1

Cranach reserves the right to make changes in specifications and materials and to change or discontinue models both without notice or obligation. Dimensions are for reference only.

VALVE & TRIM

C61.PB11

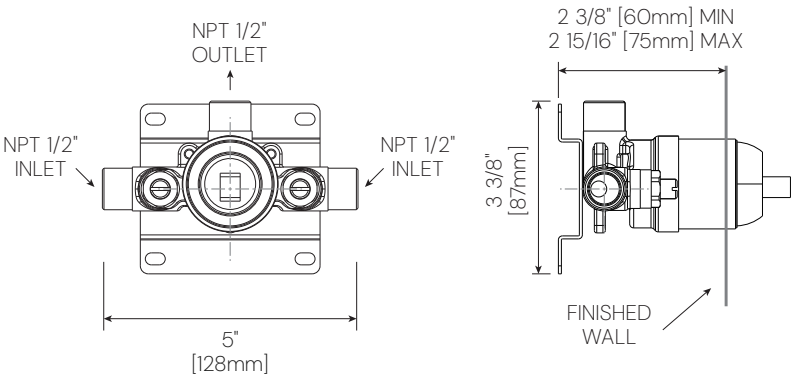

FEATURES

- Pressure Balance Valve
  Consistent water temperature, enhanced safety, and reliable performance.
- Single Outlet
  Single water flow function, simple and practical design.

SPECIFICATION

- Inlet: NPT 1/2" male connection
- Outlet: NPT 1/2" male connection
- Cartridges included

FLOW

- 7 GPM @ 80 PSI MAX

WARRANTY

- Parts and Finish: Limited lifetime warranty for residential, or 10 years for commercial purchasers and multi-family (apartments and condominiums) residential, in each case from the date of purchase.

STANDARDS

- ASME A112.18.1/CSA B125.1

Cranach deserves the right to make changes in specifications and materials and to change or discontinue models both without notice or obligation. Dimensions are for reference only.

VALVE & TRIM

C64.CR11

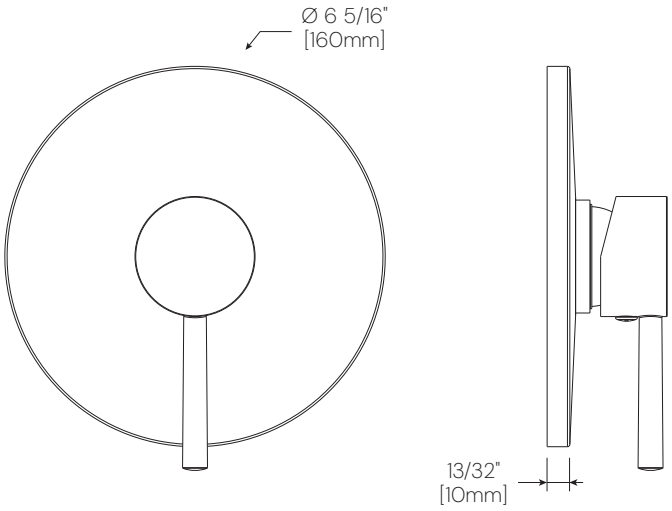

FEATURES

- Corrosion-Resistant Finish
  Resilient coating, defense against corrosion and wear.
- All Metal Construction
  Durable metal build, superior strength and long-lasting reliability.

SPECIFICATION

- Handle controls volume and temperature
- Finish Availability: Polished Chrome/Matte Black/Brushed Nickel/Brushed Gold

WARRANTY

- Parts and Finish: Limited lifetime warranty for residential, or 10 years for commercial purchasers and multi-family (apartments and condominiums) residential, in each case from the date of purchase.

STANDARDS

- ASME A112.18.1/CSA B125.1

Cranach deserves the right to make changes in specifications and materials and to change or discontinue models both without notice or obligation. Dimensions are for reference only.