HAND SHOWER

C90.HS01

CRANACH
BATH & KITCHEN

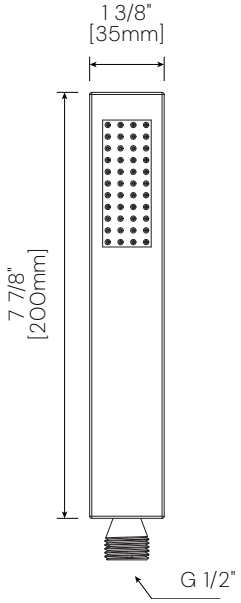

FEATURES

- Single Function
  Single stream full body coverage engineered for total immersion.
- Easy Clean Spray Nozzles
  Lime and calcium buildup prevention, hassle-free maintenance.
- All Metal Construction
  Durable metal build, superior strength and long-lasting reliability.

SPECIFICATION

- Inlet: G 1/2" male connection
- Finish Availability: Polished Chrome/Matte Black/Brushed Nickel/ Brushed Gold
- Hose and holder not Included

FLOW

- 1.8/2.5 GPM @ 80 PSI MAX

WARRANTY

- Parts and Finish: Limited lifetime warranty for residential, or 10 years for commercial purchasers and multi-family (apartments and condominiums) residential, in each case from the date of purchase.

STANDARDS

- ASME A112.18.1/CSA B125.1

Cranach reserves the right to make changes in specifications and materials and to change or discontinue models both without notice or obligation. Dimensions are for reference only.

SHOWER HOSE

C96.SH01 / C96.SH21

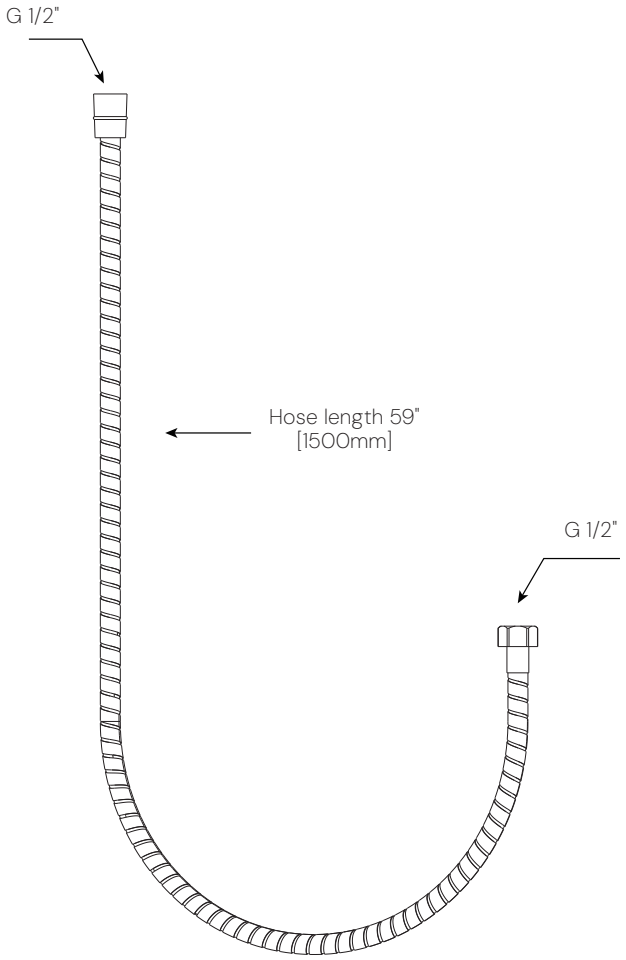

FEATURES

- Metal-Clad Construction (C96.SH01)
  Metal-clad build, superior strength and long-lasting reliability.
- All Metal Construction (C96.SH21)
  Durable metal build, superior strength and long-lasting reliability.

SPECIFICATION

- Outlet: G 1/2" female connection
- Inlet: G 1/2" female connection
- 59"(1500mm) length hose
- Finish Availability:
  C96.SH01 Brushed Gold/Brushed Nickel/ Matte Black
  C96.SH21 Polished Chrome/Polished Nickel/ Gun Grey/Rose Gold/ Vibrant Titanium Gold/ Zirconium Gold/Oil Rubbed Bronze

WARRANTY

- Parts and Finish: Limited lifetime warranty for residential, or 10 years for commercial purchasers and multi-family (apartments and condominiums) residential, in each case from the date of purchase.

STANDARDS

- ASME A112.18.1/CSA B125.1

Cranach reserves the right to make changes in specifications and materials and to change or discontinue models both without notice or obligation. Dimensions are for reference only.

SHOWER HOLDER

C92.HE01

CRANACH
BATH & KITCHEN

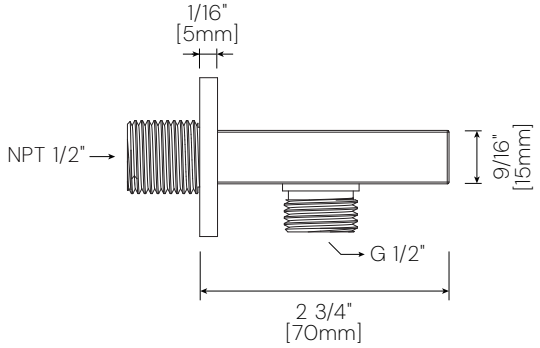

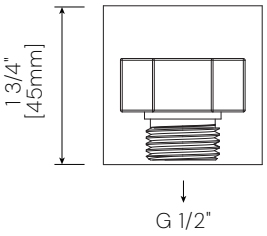

FEATURES

- Integrated Holder
  Fixed design for easy and convenient hand shower storage.
- All Metal Construction
  Durable metal build, superior strength and long-lasting reliability.
- With Water Supply
  Built-in connection for seamless water flow and easy installation.

SPECIFICATION

- Inlet: NPT 1/2" male connection
- Outlet: G 1/2" male connection
- Finish Availability: Polished Chrome/Matte Black/Brushed Nickel/ Brushed Gold

WARRANTY

- Parts and Finish: Limited lifetime warranty for residential, or 10 years for commercial purchasers and multi-family (apartments and condominiums) residential, in each case from the date of purchase.

STANDARDS

- ASME A112.18.1/CSA B125.1

Cranach reserves the right to make changes in specifications and materials and to change or discontinue models both without notice or obligation. Dimensions are for reference only.