HAND SHOWER

C90.HS22

CRANACH
BATH & KITCHEN

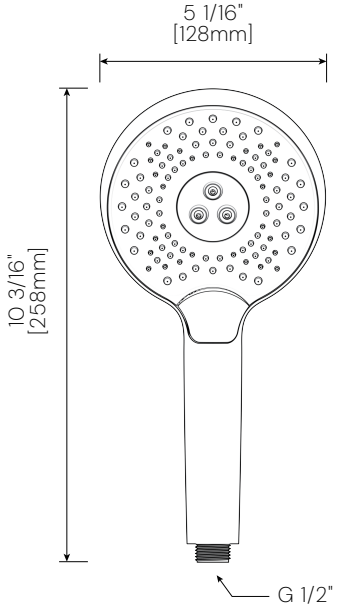

FEATURES

- 3 Spray Patterns
  Three spray options to customize according to personal preference.
- Easy Clean Spray Nozzles
  Lime And Calcium Buildup Prevention, Hassle-free Maintenance.
- Engineering Grade ABS Construction
  Premium ABS material, durable and lightweight design.

SPECIFICATION

- 3 Spray Modes: rainfall / massage / mixed mode
- Inlet: G 1/2" male connection
- Finish Availability: Polished Chrome/Matte Black/Brushed Nickel/ Brushed Gold
- Hose and holder not Included

FLOW

- 1.8/2.5 GPM @ 80 PSI MAX

WARRANTY

- Parts and Finish: Limited lifetime warranty for residential, or 10 years for commercial purchasers and multi-family (apartments and condominiums) residential, in each case from the date of purchase.

STANDARDS

- ASME A112.18.1/CSA B125.1

Cranach reserves the right to make changes in specifications and materials and to change or discontinue models both without notice or obligation. Dimensions are for reference only.

SHOWER HOSE

C96.SH01 / C96.SH21

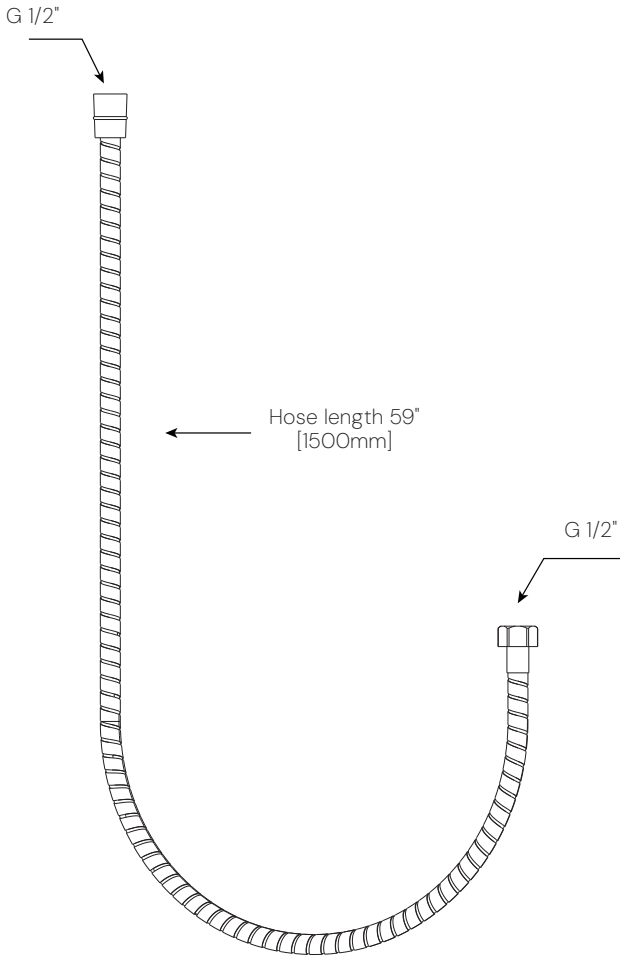

FEATURES

- Metal-Clad Construction (C96.SH01)
  Metal-clad build, superior strength and long-lasting reliability.
- All Metal Construction (C96.SH21)
  Durable metal build, superior strength and long-lasting reliability.

SPECIFICATION

- Outlet: G 1/2" female connection
- Inlet: G 1/2" female connection
- 59"(1500mm) length hose
- Finish Availability:
  C96.SH01 Brushed Gold/Brushed Nickel/ Matte Black
  C96.SH21 Polished Chrome/Polished Nickel/ Gun Grey/Rose Gold/ Vibrant Titanium Gold/ Zirconium Gold/Oil Rubbed Bronze

WARRANTY

- Parts and Finish: Limited lifetime warranty for residential, or 10 years for commercial purchasers and multi-family (apartments and condominiums) residential, in each case from the date of purchase.

STANDARDS

- ASME A112.18.1/CSA B125.1

Cranach reserves the right to make changes in specifications and materials and to change or discontinue models both without notice or obligation. Dimensions are for reference only.

SLIDE BAR

C95.SLO2

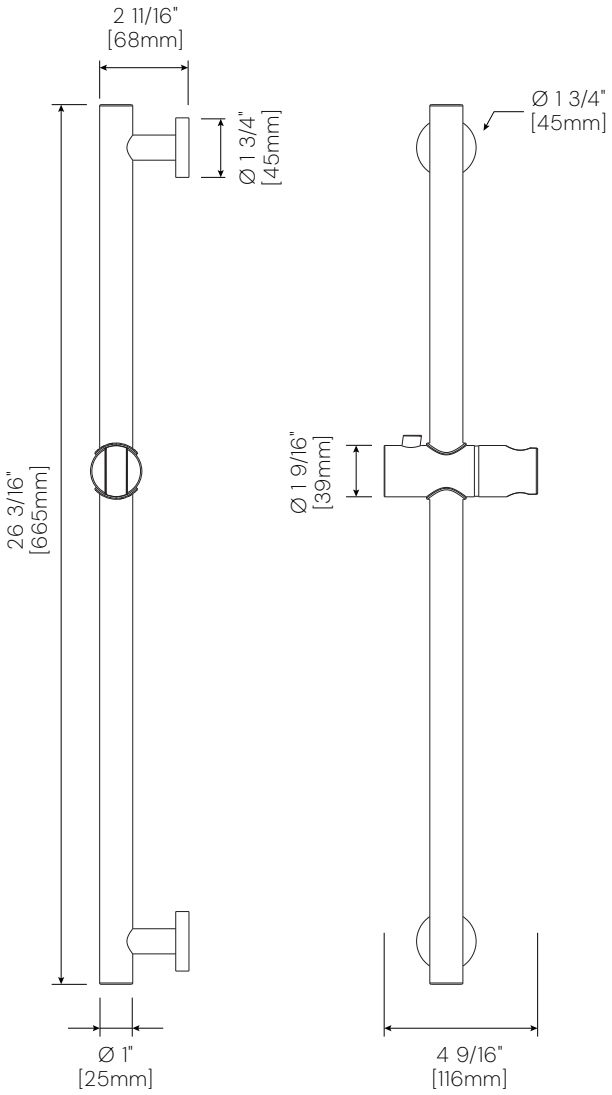

FEATURES

- Adjustable Mounting Brackets
  Easy installation, flexible placement, and customizable positioning.
- Metal Rod & ABS Sleeve
  Rigid metal structure, engineering-grade ABS for wear resistance and silent operation.
- No Water Supply
  Requires external water connection for functionality.

SPECIFICATION

- Finish Availability: Polished Chrome/Matte Black/Brushed Nickel/Brushed Gold
- Mounting hardware included

WARRANTY

- Parts and Finish: Limited lifetime warranty for residential, or 10 years for commercial purchasers and multi-family (apartments and condominiums) residential, in each case from the date of purchase.

STANDARDS

- ASME A112.18.1/CSA B125.1

Cranach reserves the right to make changes in specifications and materials and to change or discontinue models both without notice or obligation. Dimensions are only for reference only.

WATER SUPPLY ELBOW

C91.WS02

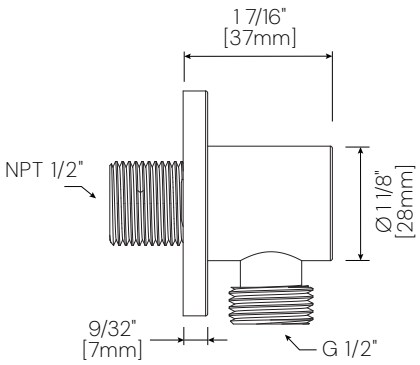

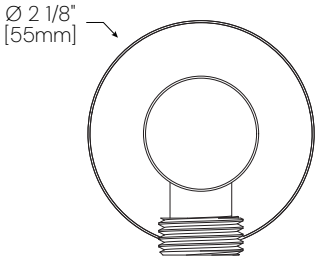

FEATURES

- All Metal Construction
  Durable metal build, superior strength and long-lasting reliability.
- Easy Wipe Clean
  Chemical-free cleaning, effortless maintenance on frequently touched areas.

SPECIFICATION

- Inlet: NPT 1/2" male connection
- Outlet: G 1/2" male connection
- Finish Availability: Polished Chrome/Matte Black/Brushed Nickel/ Brushed Gold

WARRANTY

- Parts and Finish: Limited lifetime warranty for residential, or 10 years for commercial purchasers and multi-family (apartments and condominiums) residential, in each case from the date of purchase.

STANDARDS

- ASME A112.18.1/CSA B125.1

Cranach reserves the right to make changes in specifications and materials and to change or discontinue models both without notice or obligation. Dimensions are for reference only.