TOWEL BAR

C86.RU01

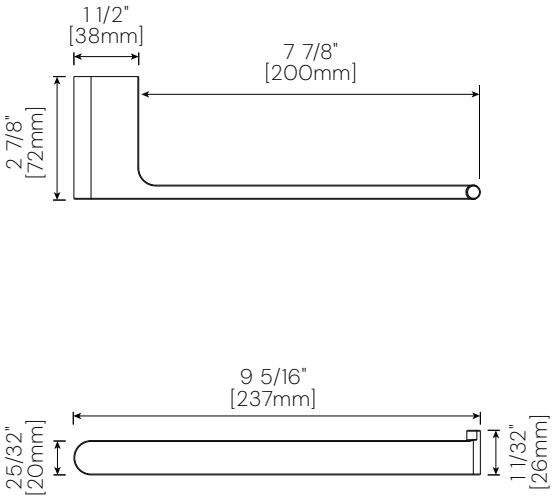

FEATURES

- All Metal Construction
  Durable metal build, superior strength and long-lasting reliability.
- Easy Wipe Clean
  Chemical-free cleaning, effortless maintenance on frequently touched areas.

SPECIFICATION

- Installation Type: Drilled mounting
- Finish Availability: Polished Chrome/Matte Black/Brushed Nickel/ Brushed Gold

WARRANTY

- Parts and Finish: Limited lifetime warranty for residential, or 10 years for commercial purchasers and multi-family (apartments and condominiums) residential, in each case from the date of purchase.

STANDARDS

- ASME A112.18.1/CSA B125.1

Cranach reserves the right to make changes in specifications and materials and to change or discontinue models both without notice or obligation. Dimensions are for reference only.