# *PAPER HOLDER*

*C87.RU01*

CRANACH
BATH & KITCHEN

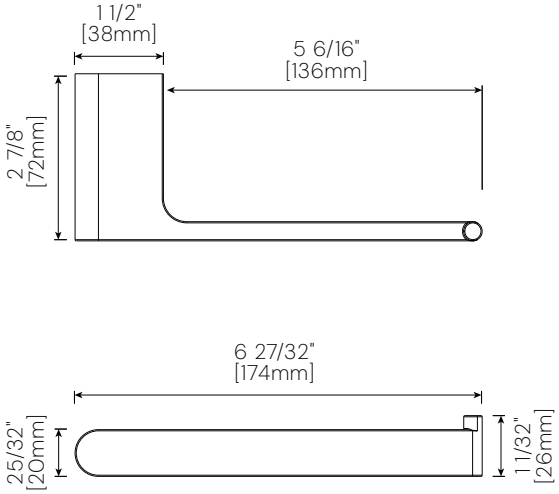





## FEATURES

- All Metal Construction
  Durable metal build, superior strength and long-lasting reliability.
- Easy Wipe Clean
  Chemical-free cleaning, effortless maintenance on frequently touched areas.

## SPECIFICATION

- Installation Type: Drilled mounting
- Finish Availability: Polished Chrome/Matte Black/Brushed Nickel/ Brushed Gold

## WARRANTY

- Parts and Finish: Limited lifetime warranty for residential, or 10 years for commercial purchasers and multi-family (apartments and condominiums) residential, in each case from the date of purchase.

## STANDARDS

- ASME A112.18.1/CSA B125.1

*Cranach reserves the right to make changes in specifications and materials and to change or discontinue models both without notice or obligation. Dimensions are for reference only.*